Detail 'safe edge'
1/2.5

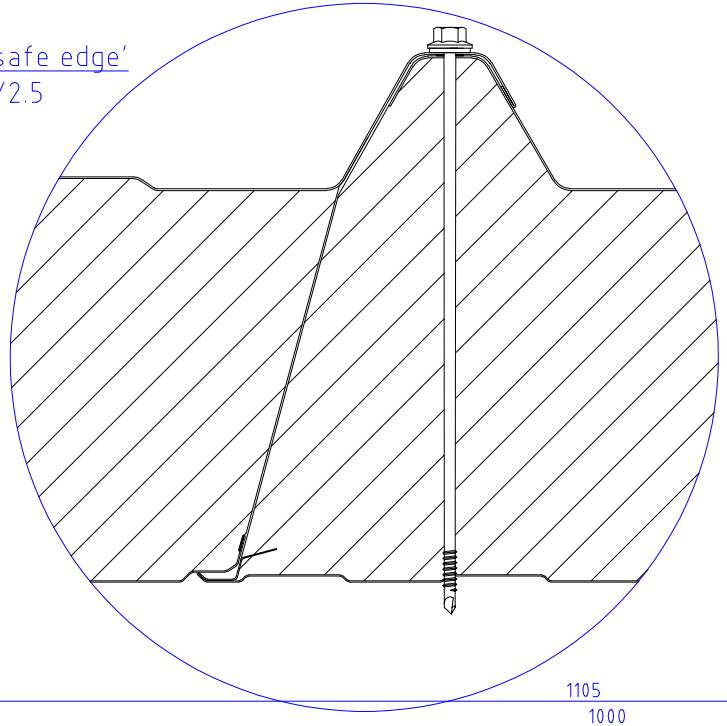

Detail
1/2.5

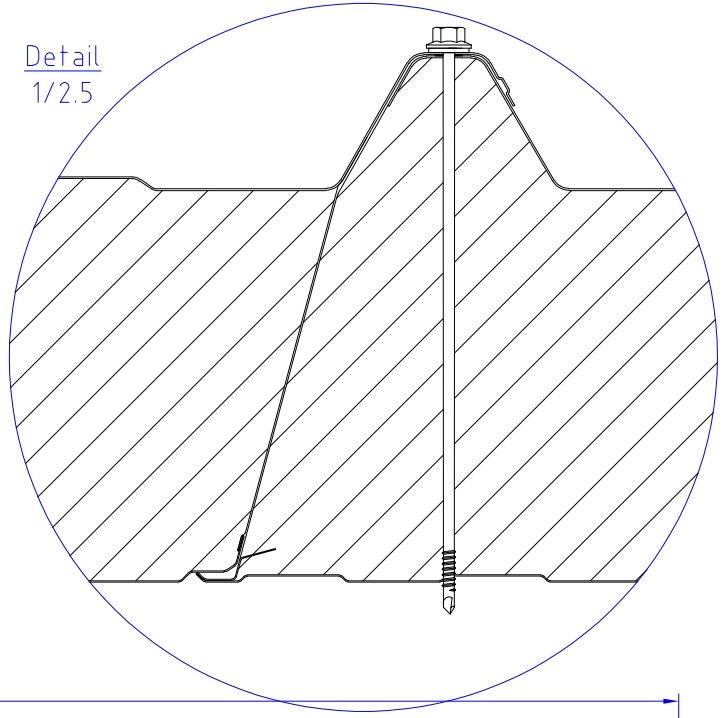

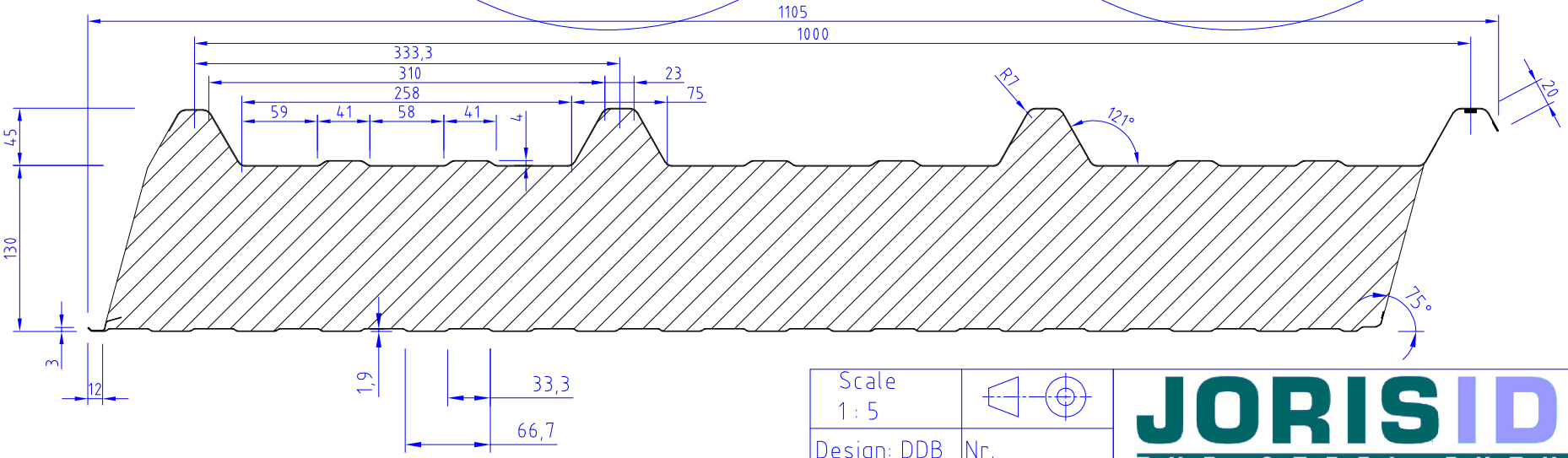

Scale 1 : 5		
Design: DDB	Nr.	
Approval: LD		Rev. H
Update: 15.07.2024		
JI ROOF 1000 x 130		

JORISIDE
THE STEEL FUTURE

JORIS IDE nv www.joriside.be
Hille 174; 8750 Zwevezele; Belgium
Tel: 0032 (0) 51612 871 Fax: 0032 (0) 51612 700